Dylan Thornburg
Michael Mishkanian
ECEN 100L
Winter 2024

Project 2: Transient Analysis

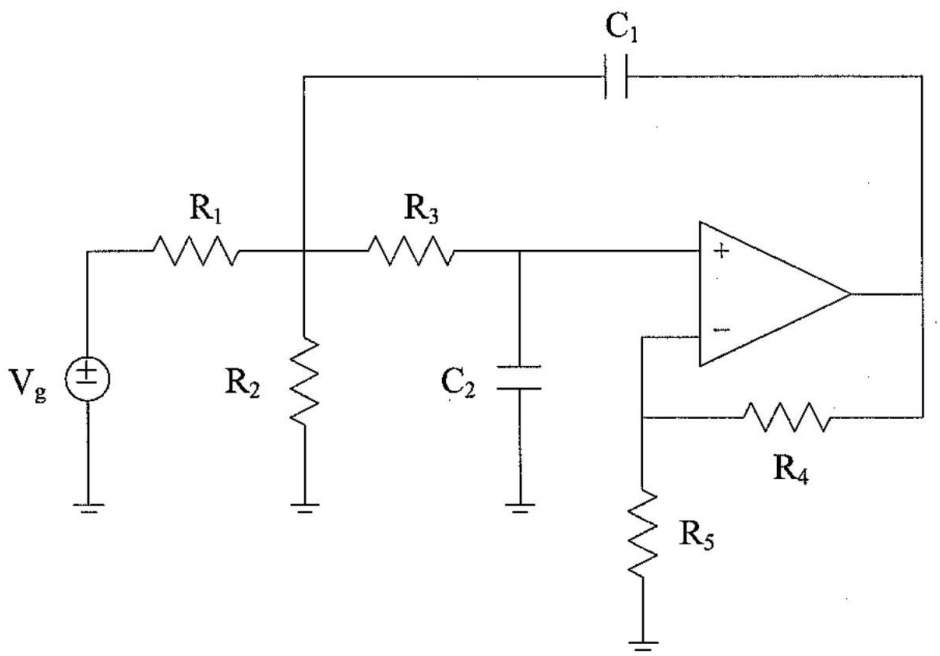

Fig. 1. A test circuit for transient analysis.

Problem 1: Derive the algebraic equations that describe this circuit (express them in matrix form).

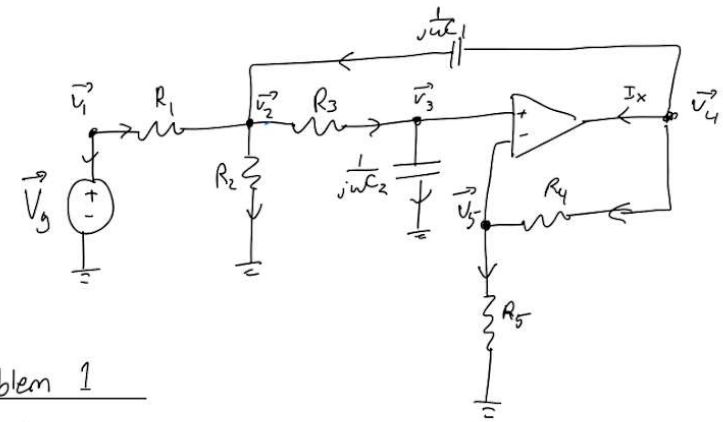

Problem 1

KCL

1) $\vec{I}_g + \vec{I}_{R1} = 0$

2) $-\vec{I}_{R1} + \vec{I}_{R2} + \vec{I}_{R3} - \vec{I}_{C1} = 0$

3) $-I_{R3} + \vec{I}_{C2} = 0$

4) $\vec{I}_x + \vec{I}_{R4} + \vec{I}_{C1} = 0$

5) $-\vec{I}_{R4} + I_{R5} = 0$

$\vec{I}_g = ?$

$\vec{I}_x = ?$

$\vec{I}_{R1} = (\vec{V_1} - \vec{V_2})/R_1$

$\vec{I}_{R2} = \vec{V_2}/R_2$

$\vec{I}_{R3} = (\vec{V_2} - \vec{V_3})/R_3$

$\vec{I}_{R4} = (\vec{V_4} - \vec{V_5})/R_4$

$\vec{I}_{R5} = \vec{V_5}/R_5$

$\vec{I}_{C2} = j\omega C_2 \vec{V_3} = C_2 \frac{d\vec{V_{C1}}}{dt} = C_2 \vec{V_3}$

$\vec{I}_{C1} = j\omega C_1 (\vec{V_4} - \vec{V_2}) = C_1 (\vec{V_4} - \vec{V_2})$

Replace Equations 1 and 4

1) $\vec{V_1} = \vec{V_g}$

2) $-\frac{(\vec{V_1} - \vec{V_2})}{R_1} + \frac{\vec{V_2}}{R_2} + \frac{(\vec{V_2} - \vec{V_3})}{R_3} - j\omega C_1 (\vec{V_4} - \vec{V_2}) = 0$

3) $-\frac{(\vec{V_2} - \vec{V_3})}{R_3} + j\omega C_2 \vec{V_3} = 0$

4) $\vec{V_3} = \vec{V_5}$

5) $-\frac{(\vec{V_4} - \vec{V_5})}{R_4} + \frac{\vec{V_5}}{R_5} = 0$

Simplify Equations

1) $\vec{V_1} = \vec{V_g}$

2) $\vec{V_1}\left(-\frac{1}{R_1}\right) + \vec{V_2}\left(\frac{1}{R_1} + \frac{1}{R_2} + \frac{1}{R_3}\right) + \vec{V_3}\left(-\frac{1}{R_3}\right) + \vec{V_2}C_1 + \vec{V_4}\left(-j\omega C_1\right) = 0$

3) $\vec{V_2}\left(-\frac{1}{R_3}\right) + \vec{V_3}\left(\frac{1}{R_3} + j\omega C_2\right) = 0$

4) $\vec{V_3}\left(\frac{1}{R_4} + \frac{1}{R_5}\right) + \vec{V_4}\left(-\frac{1}{R_4}\right) = 0$

Split up into real and immaginary

1) $\vec{V_1} = \vec{V_g}$

2) $\vec{V_1}\left(\frac{1}{R_1}\right) + \vec{V_2}\left(-\frac{1}{R_1} - \frac{1}{R_2} - \frac{1}{R_3}\right) + \vec{V_3}\left(\frac{1}{R_3}\right) = \vec{V_2}(-C_1) + \vec{V_4}C_1$

3) $\vec{V_2}\left(\frac{1}{R_3}\right) + \vec{V_3}\left(-\frac{1}{R_3}\right) = \vec{V_3}C_2$

4) $\vec{V_3}\left(\frac{1}{R_4} + \frac{1}{R_5}\right) + \vec{V_4}\left(-\frac{1}{R_4}\right) = 0$

$$\begin{bmatrix} 0 & 0 & 0 & 0 & 0 \\ 0 & -C_1 & 0 & 0 & C_1 \\ 0 & 0 & -C_2 & 0 & 0 \\ 0 & 0 & 0 & 0 & 0 \\ 0 & 0 & 0 & 0 & 0 \end{bmatrix} \begin{bmatrix} \vec{V_1} \\ \vec{V_2} \\ \vec{V_3} \\ \vec{V_4} \\ \vec{V_5} \end{bmatrix} = \begin{bmatrix} 1 & 0 & 0 & 0 & 0 \\ -1/R_1 & -\frac{1}{R_1}-\frac{1}{R_2}-\frac{1}{R_3} & -\frac{1}{R_3} & 0 & 0 \\ 0 & -1/R_3 & 1/R_3 & 0 & 0 \\ 0 & 0 & 0 & \frac{1}{R_4}+\frac{1}{R_5} & -\frac{1}{R_4} \\ 0 & 0 & -1 & 1 & 0 \end{bmatrix} \begin{bmatrix} \vec{V_1} \\ \vec{V_2} \\ \vec{V_3} \\ \vec{V_4} \\ \vec{V_5} \end{bmatrix} + \begin{bmatrix} -\vec{V_g} \\ 0 \\ 0 \\ 0 \\ 0 \end{bmatrix}$$

Problem 2: Write an m-file that simulates the step response of the circuit. Use this file to obtain a plot that corresponds to the following element values: R1 = R2 = 5 KOhms, R3 = 400 Ohms, and C1 = C2 = 0.1 uF. What is the peak overshoot in this case? NOTE: The peak overshoot is defined as the maximal amount by which Vo(t) exceeds 1 V.

Peak overshoot is ~0.53V

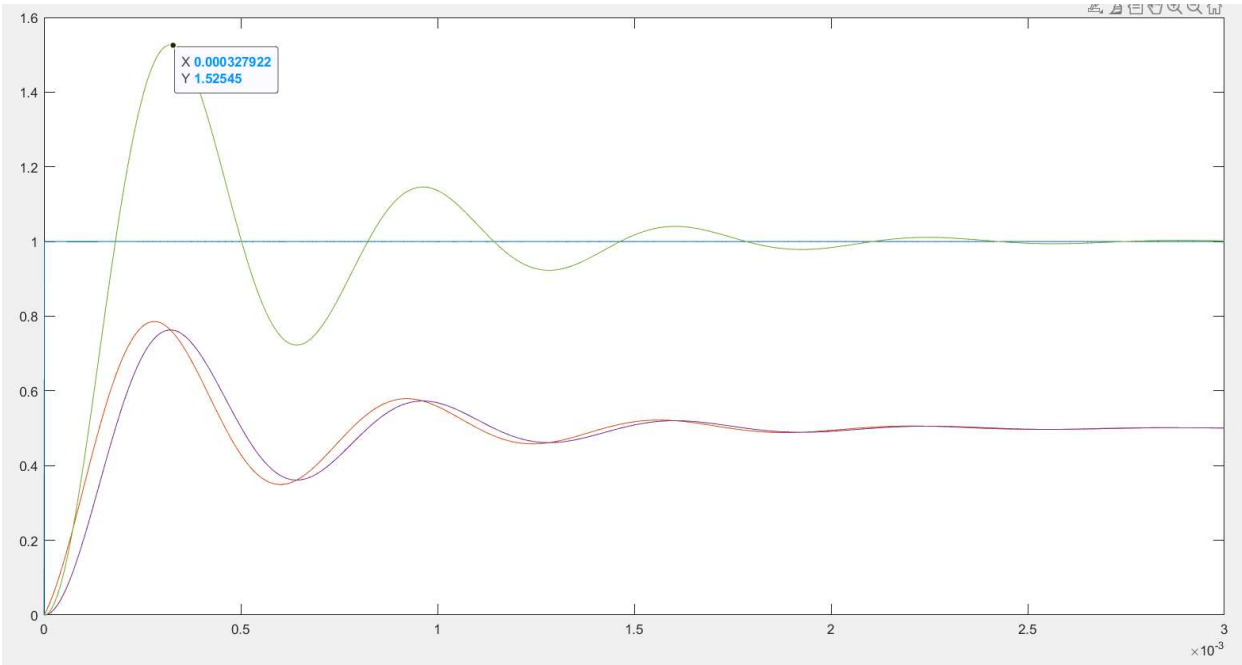

Problem 3: Perform a transient analysis of your circuit in SPICE, and compare with the results obtained using Matlab.

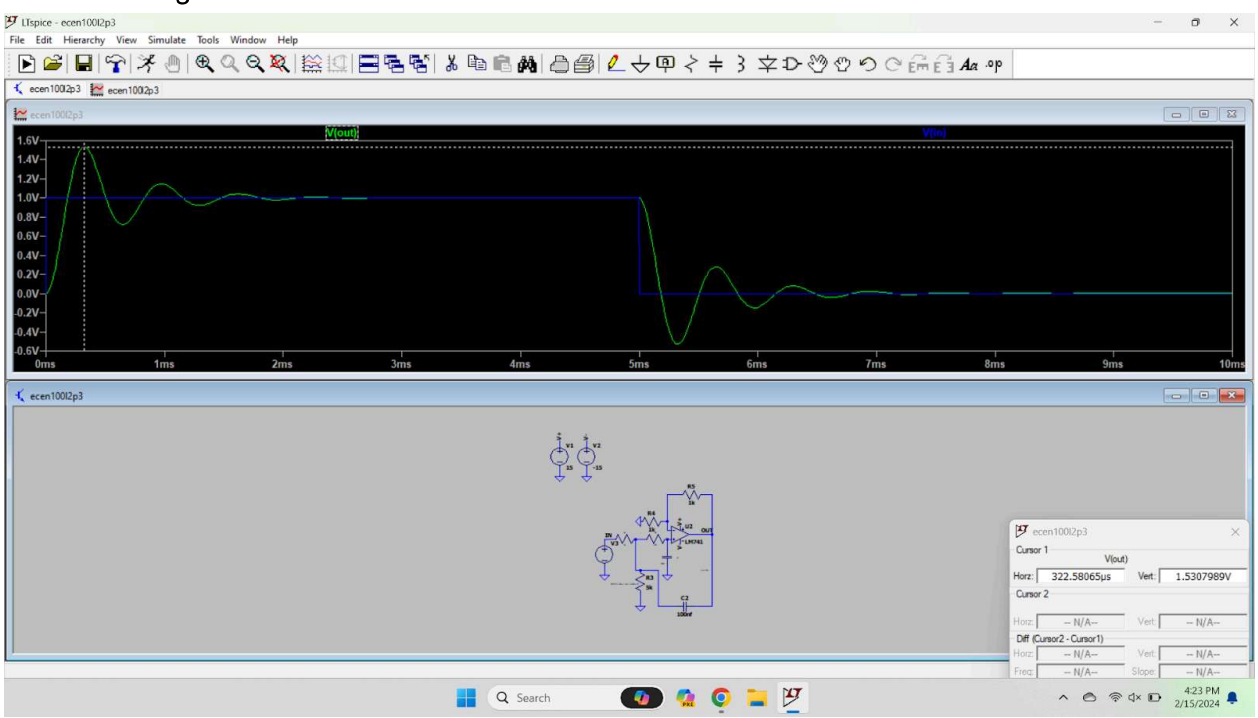

LTSpice Results Graphed over P2 Matlab. We can see it's very similar but not the exact same.

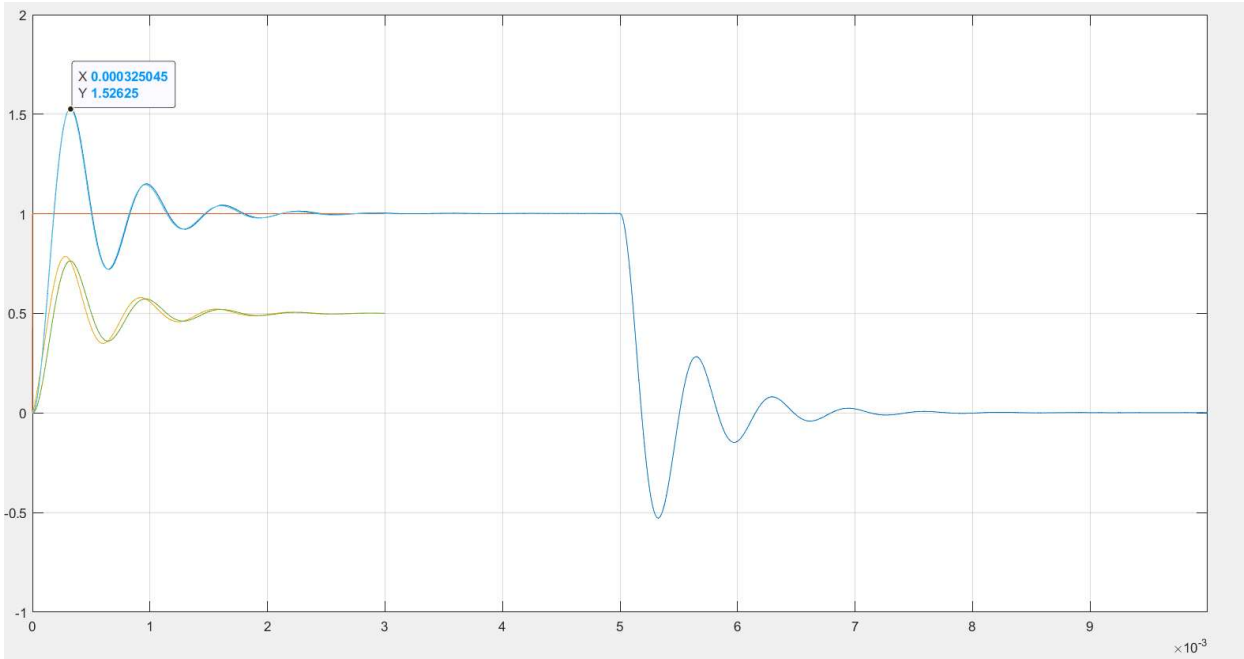
X 0.000325045
Y 1.52625
2
1.5
1
0.5
0
-0.5
-1
0
1
2
3
4
5
6
7
8
9
×10^-3

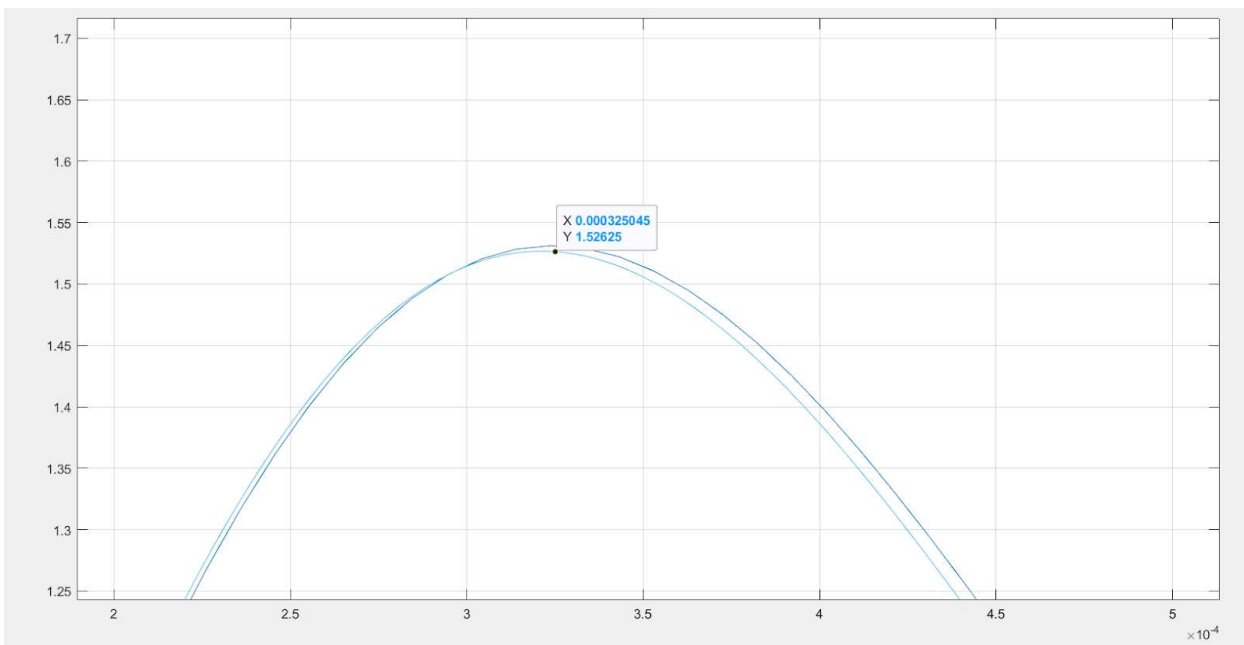
X 0.000325045
Y 1.52625
1.7
1.65
1.6
1.55
1.5
1.45
1.4
1.35
1.3
1.25
2
2.5
3
3.5
4
4.5
5
×10^-4

Problem 4: Use partial fraction expansion to establish that the resulting step response can be expressed as,

$$v_0(t) = 1 - e^{-\alpha t}\cos\beta t - (\frac{\alpha}{\beta})e^{-\alpha t}\sin\beta t$$

Problem 4

Goal: $V_o(t) = 1 - e^{-\alpha t}\cos\beta t - (\frac{\alpha}{\beta})e^{-\alpha t}\sin\beta t$

$$H(s) = \frac{V_o(s)}{V_g(s)} = \frac{b}{s^2+as+b}$$

$$\alpha = \frac{a}{2} \Rightarrow a = 2\alpha$$

$$V_o(s) = H(s)\cdot V_g(s)$$

$$= \frac{b}{s^2+as+b}\cdot\frac{1}{s}$$

$$= \frac{\beta^2+\alpha^2}{s^2+2\alpha s+\beta^2+\alpha^2}\cdot\frac{1}{s}$$

$$V_o(s) = \frac{\beta^2+\alpha^2}{(s+\alpha)^2+\beta^2}\cdot\frac{1}{s}$$

$$\beta = \sqrt{b-(\frac{a}{2})^2}$$

$$\beta = \sqrt{b-(\frac{2\alpha}{2})^2}$$

$$\beta = \sqrt{b-\alpha^2}$$

$$\beta^2 = b-\alpha^2$$

$$b = \beta^2+\alpha^2$$

Partial Fraction Expansion

$$\Rightarrow \frac{A}{s} + \frac{Bs+C}{(s+\alpha)^2+\beta^2}$$

$$A = \lim_{s\to 0} s(V_o(s)) = \lim_{s\to 0}\frac{\beta^2+\alpha^2}{(0+\alpha)^2+\beta^2} = 1$$

$$V_o(s) = \frac{(s+\alpha)^2+\beta^2+Bs^2+Cs}{s((s+\alpha)^2+\beta^2)} = \frac{s^2+2\alpha s+\alpha^2+\beta^2+Bs^2+Cs}{s((s+\alpha)^2+\beta^2)} = \frac{s^2\overbrace{(1+B)}^{0}+s\overbrace{(2\alpha+C)}^{0}+\alpha^2+\beta^2}{s((s+\alpha)^2+\beta^2)}$$

$$1+B=0 \qquad 2\alpha+C=0$$

$$B=-1 \qquad C=-2\alpha$$

$$V_o(s) = \frac{1}{s} + \frac{-s-2\alpha}{(s+\alpha)^2+\beta^2}$$

Problem 4 continued

$$V_o(s) = \frac{1}{s} + \frac{-s-2\alpha}{(s+\alpha)^2+\beta^2}$$

$$V_o(s) = \frac{1}{s} - \frac{(s+\alpha)}{(s+\alpha)^2+\beta^2} - \frac{\alpha}{(s+\alpha)^2+\beta^2}$$

Transforms

$$e^{-\alpha t}\cos\beta t \longrightarrow \frac{s+\alpha}{(s+\alpha)^2+\beta^2}$$

$$\left(\frac{\alpha}{\beta}\right)e^{-\alpha t}\sin\beta t \longrightarrow \frac{\cancel{\beta}}{(s+\alpha)^2+\beta^2}\left(\frac{\alpha}{\cancel{\beta}}\right)$$

Inverse Laplace Transform

$$\boxed{V_o(t) = 1 - e^{-\alpha t}\cos\beta t - \left(\frac{\alpha}{\beta}\right)e^{-\alpha t}\sin\beta t}$$

Problem 5: Based on Problem 4, show that the maximal and minimal values of Vo(t) occur at times tk that satisfy sin(Btk). Use this result to show that the first maximum occurs at time $t_1 = \frac{\pi}{\beta}$ and that the peak overshoot is, $p.o. = e^{-\alpha\pi/\beta}$

Problem 5

$$\frac{d}{dt}\left[V_o(t)\right] = 0 - \left[-(\alpha e^{-\alpha t})(\cos\beta t) + (e^{-\alpha t})(-\beta\sin\beta t)\right] - \left(\frac{\alpha}{\beta}\right)\left[-\alpha e^{-\alpha t}\sin\beta t + \beta e^{-\alpha t}\cos\beta t\right]$$

Set this equal to zero.

$$0 = \alpha e^{-\alpha t}\cos\beta t + e^{-\alpha t}\beta\sin\beta t + \frac{\alpha^2}{\beta}e^{-\alpha t}\sin\beta t - \alpha e^{-\alpha t}\cos\beta t$$

$$0 = e^{-\alpha t}\beta\sin\beta t + \frac{\alpha^2}{\beta}e^{-\alpha t}\sin\beta t$$

$$0 = \left(\beta + \frac{\alpha^2}{\beta}\right)e^{-\alpha t}\sin\beta t$$

This is only zero when $\sin\beta t = 0$

Assuming $t > 0$, $t = \frac{\pi}{\beta}, \frac{2\pi}{\beta}, \ldots$

Thus, the first maximum occurs at $\boxed{t_1 = \frac{\pi}{\beta}}$

Plug in t_1 back in, we have,

$$\left(\beta + \frac{\alpha^2}{\beta}\right)\underbrace{e^{-\alpha\left(\frac{\pi}{\beta}\right)}}_{P.O.}\sin\beta\left(\frac{\pi}{\beta}\right) = 0$$

Thus, the peak overshoot is, $\boxed{P.O. = e^{-\frac{\alpha\pi}{\beta}}}$

Problem 6: Using equations (1)-(4), design R1, R2, and R3 so that the peak overshoot of the circuit in Fig. 1 is no larger than 10%. Use the m-file developed in Problem 2 to verify your design.

Problem 6

Eqn 1: $R_4 = R_5 = 10^3\ \Omega$

Eqn 2: $C_1 = C_2 = 0.1\ \mu F = 10^{-7}\ F$

Eqn 3: $R_1 = R_2 = \frac{2}{a}\ 10^7$

Eqn 4: $R_3 = \frac{a}{b} \cdot 10^7$

From problem 4 we know,

$\alpha = \frac{a}{2}$ $\quad \beta = \sqrt{b - (\frac{a}{2})^2}$

$a = 2\alpha$ $\quad \beta = \sqrt{b - \alpha^2}$

$$e^{-\frac{\alpha\pi}{\beta}} \leq 0.1$$

$$-\frac{\alpha\pi}{\beta} \leq \ln(0.1)$$

$$\beta \geq -\frac{\alpha\pi}{\ln(0.1)}$$

$$\beta \geq -\frac{a\ \pi}{2\ln(0.1)}$$

$$\beta \geq 2728.752$$

Let $R_1, R_2 = 5000\ \Omega$

$$\frac{2}{a} 10^7 = 5000$$

$$a = \frac{2\times10^7}{5000} = 4000 \Rightarrow \alpha = \frac{2\times10^7}{2500} = 2000$$

$$\beta = \sqrt{b - \alpha^2}$$

$$b = \beta^2 + \alpha^2$$

$$b = (2728.752)^2 + (2000)^2 = 11446087.48$$
$$= 1.1446 \times 10^7$$

$$R_3 = \frac{a}{b} \cdot 10^7 = \frac{4000}{1.1446\times10^7} \cdot 10^7 = \boxed{3494.67\ \Omega}$$

The min Resistor value is 3494.67 Ohms. With a 4000 Ohm resistor, peak overshoot is now ~0.077V, which is less than the 0.1V limit as 0.1 is 10% of 1.

Resistor values:

R1:5000

R2:5000

R3:4000

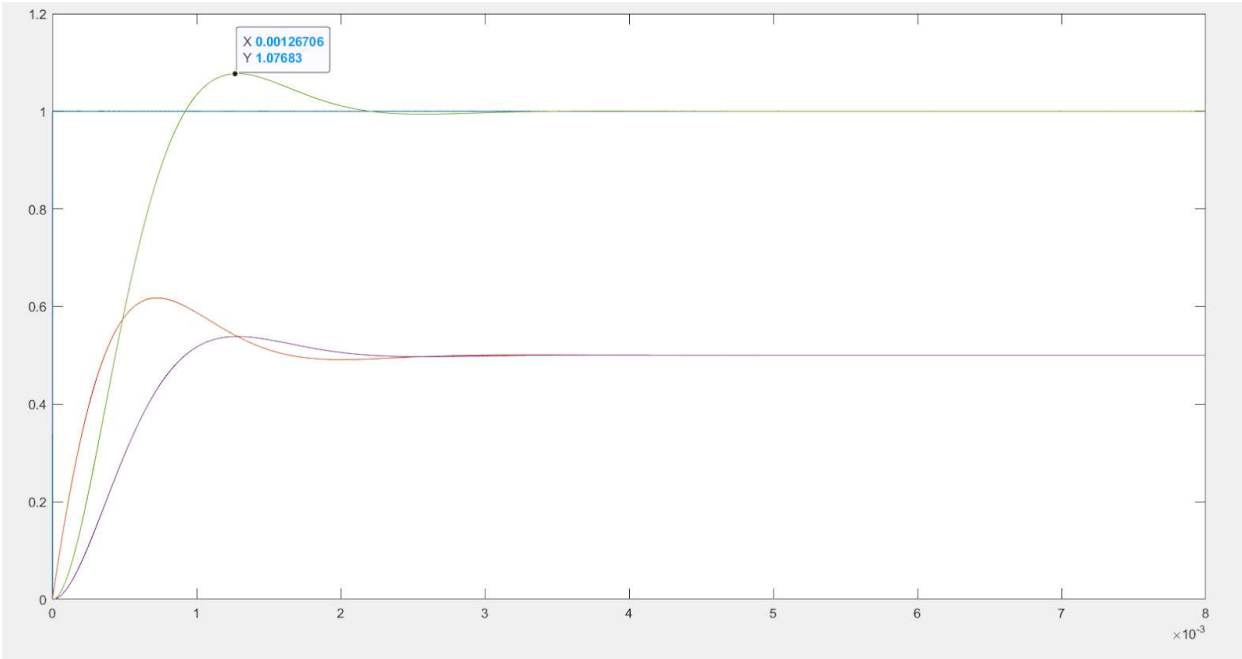

Problem 7: Assemble the circuit with the element values in Problem 2, and measure the peak overshoot. Repeat this for the values obtained in Problem 6. In both cases, compare your measurements to the simulation results.

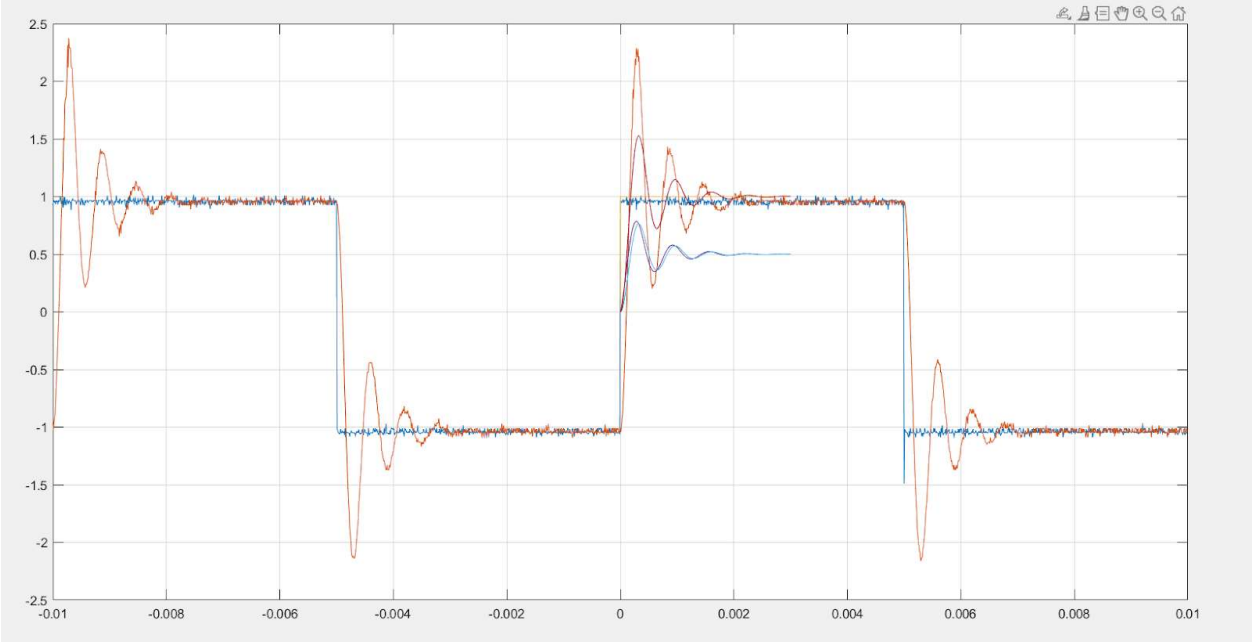
2.5
2
1.5
1
0.5
0
-0.5
-1
-1.5
-2
-2.5
-0.01
-0.008
-0.006
-0.004
-0.002
0
0.002
0.004
0.006
0.008
0.01

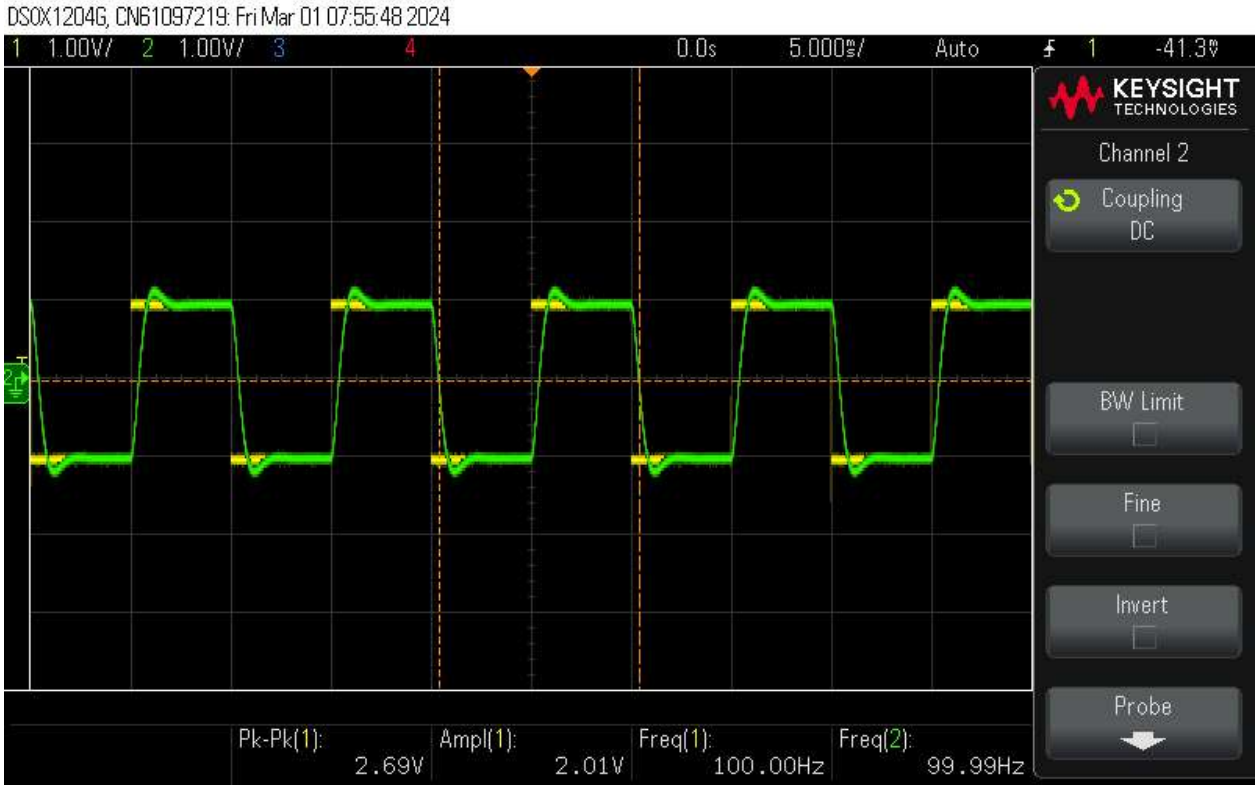
DSOX1204G, CN61097219: Fri Mar 01 07:55:48 2024
1 1.00V/ 2 1.00V/ 3 4
0.0s 5.000ms/ Auto 1 -41.3mV
KEYSIGHT TECHNOLOGIES
Channel 2
Coupling DC
BW Limit
Fine
Invert
Probe
Pk-Pk(1): 2.69V
Ampl(1): 2.01V
Freq(1): 100.00Hz
Freq(2): 99.99Hz

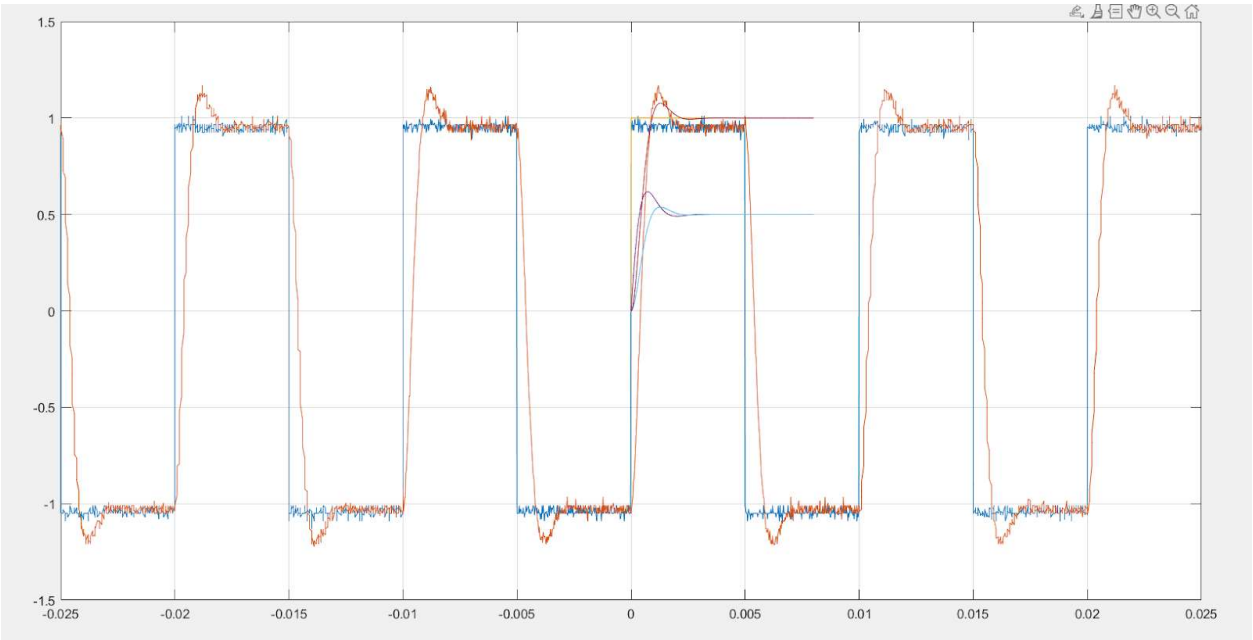
1.5
1
0.5
0
-0.5
-1
-1.5
-0.025
-0.02
-0.015
-0.01
-0.005
0
0.005
0.01
0.015
0.02
0.025